OWNER'S GUIDE

• ASSEMBLY • OPERATION • MAINTENANCE •

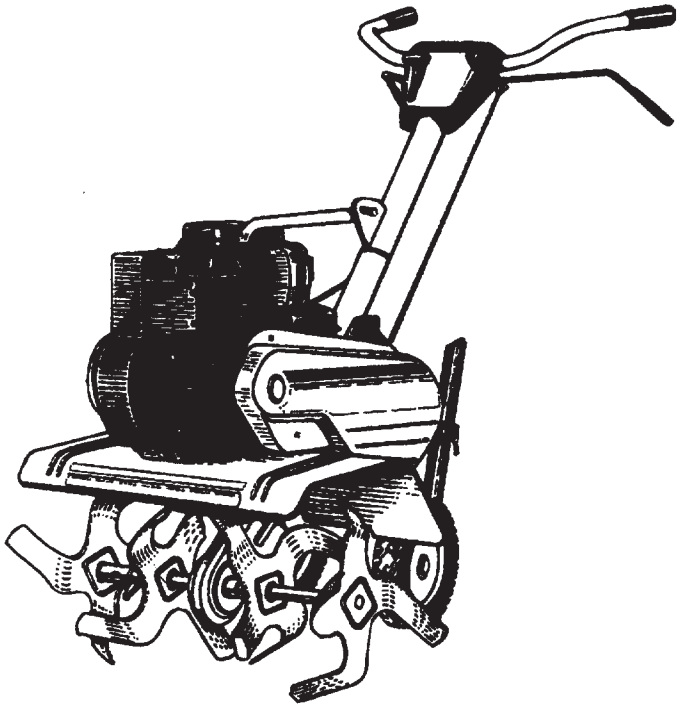

Model 340 Shown

FRONT TINE TILLERS

Models 340 and 390

Important:
Read Safety Rules and Instructions Carefully

Made in AMERICA

WARNING: This unit is equipped with an internal combustion engine and should not be used on or near any unimproved forest-covered, brush-covered or grass-covered land unless the engine's exhaust system is equipped with a spark arrester meeting applicable local or state laws (if any). If a spark arrester is used, it should be maintained in effective working order by the operator.

In the State of California the above is required by law (Section 4442 of the California Public Resources Code). Other states may have similar laws. Federal laws apply on federal lands. A spark arrester for the muffler is available through your nearest engine authorized service dealer or contact the service department, P.O. Box 368022, Cleveland, Ohio 44136-9722.

FORM NO. 770-8576M

IMPORTANT

SAFE OPERATION PRACTICES

THIS SYMBOL POINTS OUT IMPORTANT SAFETY INSTRUCTIONS WHICH, IF NOT FOLLOWED, COULD ENDANGER THE PERSONAL SAFETY AND/OR PROPERTY OF YOURSELF AND OTHERS. READ AND FOLLOW ALL INSTRUCTIONS IN THIS MANUAL BEFORE ATTEMPTING TO OPERATE YOUR TILLER. FAILURE TO COMPLY WITH THESE INSTRUCTIONS MAY RESULT IN PERSONAL INJURY. WHEN YOU SEE THIS SYMBOL— **HEED ITS WARNING.**

DANGER: **DANGER: Your tiller was built to be operated according to the rules for safe operation in this manual. As with any type of power equipment, carelessness or error on the part of the operator can result in serious injury. This tiller is capable of amputating hands and feet. Failure to observe the following safety instructions could result in serious injury or death.**

I. GENERAL OPERATION

1. Read this owner's guide carefully in its entirety before attempting to assemble this machine. Read, understand, and follow all instructions on the machine and in the manual(s) before operation. Be completely familiar with the controls and the proper use of the machine before operating it. Keep this manual in a safe place for future and regular reference and for ordering replacement parts.
2. Your tiller is a powerful tool, not a plaything. Therefore, exercise extreme caution at all times. Your unit has been designed to perform one job: to till soil. Do not use it for any other purpose.
3. Never allow children under age 14 to operate the unit. Children 14 years and older should only operate the unit under close parental supervision. Only responsible individuals who are familiar with these rules of safe operation should be allowed to use your unit.
4. Do not operate tiller while under the influence of alcohol or drugs.
5. Keep the area of operation clear of all persons, particularly small children and pets. Stop the engine when they are in the vicinity of your tiller.
6. Wear sturdy, rough-soled work shoes and close fitting slacks and shirt. Shirt and slacks that cover the arms and legs and steel-toed shoes are recommended. Do not wear loose fitting clothes or jewelry and secure hair so it is above shoulder length. They can be caught in moving parts. Never operate a unit in bare feet, sandals or sneakers.
7. Operate tiller only in daylight or good artificial light.
8. Do not start tiller unless the shift lever (if provided) is in the neutral (N) position.
9. Do not allow anyone to stand or walk in front of tiller when starting or running engine.
10. Do not place feet or hands on or near the tines when starting the engine or while the engine is running.
11. Never attempt to make depth bar, tine width, cable, handle, or wheel adjustments while the engine is running.
12. Do not leave the tiller unattended with the engine running.
13. Before attempting to remove rocks, bricks and other objects from tines, stop the engine and be sure the tines have stopped completely. Disconnect the spark plug wire and move it away from the spark plug.
14. If your machine should start making an unusual noise or vibration, immediately stop the engine and allow the machine to come to a complete stop. Disconnect the spark plug wire and move it away from the spark plug. Take the following steps:
    - Inspect for damage.
    - Repair or replace any damaged parts.
    - Check for any loose parts and tighten to assure continued safe operation.
15. Muffler and engine become hot and can cause a burn. Do not touch.
16. Keep all shields, guards and safety devices in place and operating properly.
17. Use caution when tilling near fences, buildings and underground utilities. Rotating tines can cause damage or injury.
18. Do not operate engine if air cleaner or cover over carburetor air-intake is removed, except for adjustment. Removal of such parts could create a fire hazard.
19. Only use accessories approved for this machine by the manufacturer. Read, understand, and follow all instructions provided with the approved accessory.
20. If situations occur which are not covered by this manual, use care and good judgment. Contact your dealer for assistance.

II. CHILDREN

Tragic accidents can occur if the operator is not alert to the presence of small children. Children are often attracted to the tilling activity. Never assume that children will remain where you last saw them.

1. Keep children out of the work area and under the watchful eye of a responsible adult other than the operator.
2. Be alert and turn the unit off if a child enters the area.
3. Never allow children under the age of 14 to operate the tiller.

III. SERVICE

1. Use extreme care in handling gasoline and other fuels. They are extremely flammable and the vapors are explosive.
    a. Store fuel and oil in approved containers, away from heat and open flame, and out of the reach of children. Check and add fuel before starting the engine. Never remove gas cap or add fuel while the engine is running. Allow engine to cool at least two minutes before refueling.
    b. Replace gasoline cap securely and wipe off any spilled gasoline before starting the engine as it may cause a fire or explosion.
    c. Extinguish all cigarettes, cigars, pipes and other sources of ignition.
    d. Never refuel unit indoors because flammable vapors will accumulate in the area.
    e. Never store the machine or fuel container inside where there is an open flame or spark such as a gas hot water heater, space heater, clothes dryer or furnace.
2. Never run your machine in an enclosed area as the exhaust from the engine contains carbon monoxide, which is a odorless, tasteless and deadly poisonous gas.
3. To reduce fire hazard, keep engine and muffler free of leaves, grass, and other debris build-up. Clean up fuel and oil spillage. Allow unit to cool at least 5 minutes before storing.
4. Before cleaning, repairing, or inspecting, make certain the tines and all moving parts have stopped. Disconnect the spark plug wire and keep wire away from spark plug to prevent accidental starting. Do not use flammable solutions to clean air filter.
5. Keep all nuts, bolts, and screws tight to be sure the equipment is in safe working condition.

6. Never tamper with safety devices. Check their proper operation regularly.
7. Do not alter or tamper with the engine's governor setting. The governor controls the maximum safe operating speed of the engine. Over-speeding the engine is dangerous and will cause damage to the engine and to other moving parts of the machine.

OWNER'S MANUAL	**SAFETY LABEL** 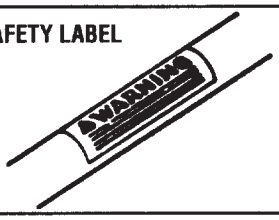	**WARNING — *YOUR RESPONSIBILITY*** Restrict the use of this power machine to persons who read, understand and follow the warnings and instructions in this manual and on the machine.

ASSEMBLY INSTRUCTIONS

IMPORTANT: This unit is shipped WITHOUT GASOLINE or OIL. After assembly, see separate engine manual for proper fuel and engine oil recommendations.

NOTE: *Left and right is determined from the operator's position, standing behind the tiller.*

TOOLS REQUIRED FOR ASSEMBLY

(1)-1/2" Wrench or Socket*
(1)-Pair of Pliers
(1)-3/8" Wrench*
*An adjustable wrench may be used.

This owner's guide covers two different model tillers. Model 340 has forward tine drive only. Model 390 has both forward and reverse tine drive. Follow only the instructions which pertain to your model tiller. See the model plate on your tiller for the correct model number.

REMOVING UNIT FROM CARTON

1. Remove staples, break glue on top flaps, or cut tape at carton end and peel along top flap to open carton.
2. Remove all loose parts included with unit.
3. Cut along dotted lines and lay carton down flat.
4. Remove packing material.
5. Roll or slide unit out of carton. Check carton thoroughly for loose parts.
6. Extend control cable(s) to the rear of the tiller and lay them on the floor. Be careful not to bend or kink control cable(s).

All hardware required for assembly has been placed in position on the tiller.

ATTACHING THE TAILPIECE AND DEPTH STAKE

Remove the two self-tapping screws which are on the front of the tailpiece. Slide the tailpiece into the frame, with the lower hole in the tailpiece toward the front. Secure with screws just removed. **(See Figure 1)**

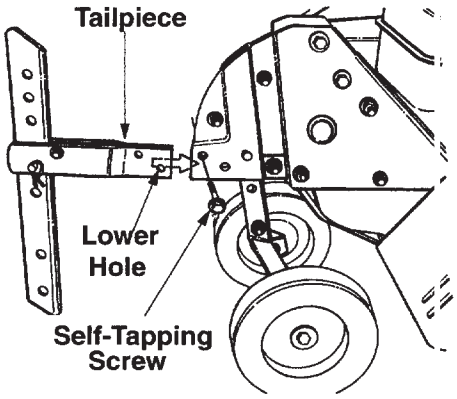

Figure 1.

ATTACHING THE HANDLE ASSEMBLY

1. Remove the hex bolt and cupped washer from the top right side of the frame halves. Hold the cable guide bracket on the left side of the frame as it will fall when the bolt is removed. **(See Figure 2)**
2. Insert the handle assembly between the two frame halves. Insert the hex bolt just removed through the frame halves, handle assembly, and into the cable guide bracket (notch in cable guide bracket goes over the flange on the frame). Tighten securely.
3. Tighten the shoulder bolt on the frame, just below the end of the handle.
4. Loosen the hand knob which secures the handle brace to the handle assembly.
5. Remove the hex lock nut from on top of the engine, just behind the spark plug. Attach the curved end of the handle brace to the top of the engine, using hex lock nut just removed. Tighten securely. **(See Figure 2)**
6. Select one of the three handle height positions (three notches in welded bracket), and tighten the hand knob to secure the handle in desired position. Make certain carriage bolt is seated **securely** into one of the three positions provided.

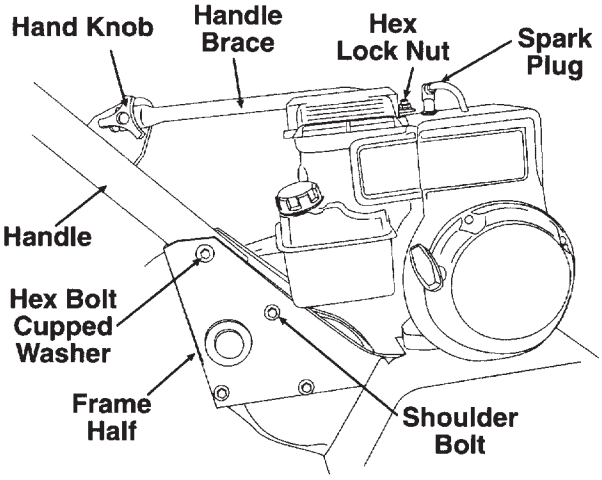

FIGURE 2.

ATTACHING THE CLUTCH CONTROL CABLE(S)

FORWARD CABLE

Attach the end of the forward cable to the bracket underneath the handle assembly as follows. (On model 390, the forward clutch cable is the cable which is attached closer to the rear of the tiller.)

1. Loosen the hex nut on the threaded rod near the end of the cable, and move it up the rod as far as it will go.
2. Unthread the rod from the rest of the cable. Hook the "Z" end of the rod into the bracket underneath the handle assembly from the right hand side. **(See Figure 3)**

3. Thread the rod back into the cable until the cable is straight. Do not tighten it enough to put any tension on the spring.
4. Thread the hex nut down against the end of cable. Use a pair of pliers and a wrench to lock the nut against the rod.

NOTE: *Do not overtighten control cable. Too much tension may cause it to break when engaged.*

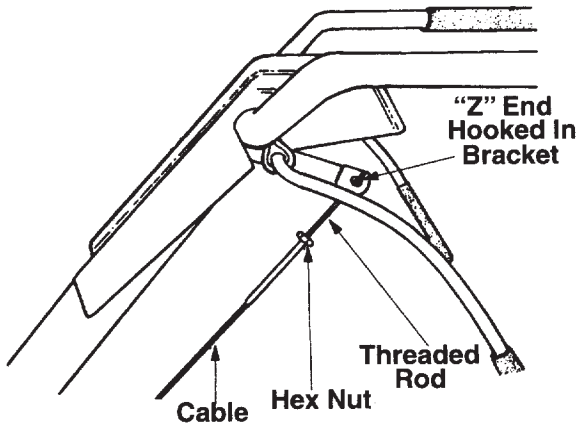

Figure 3. - Model 340

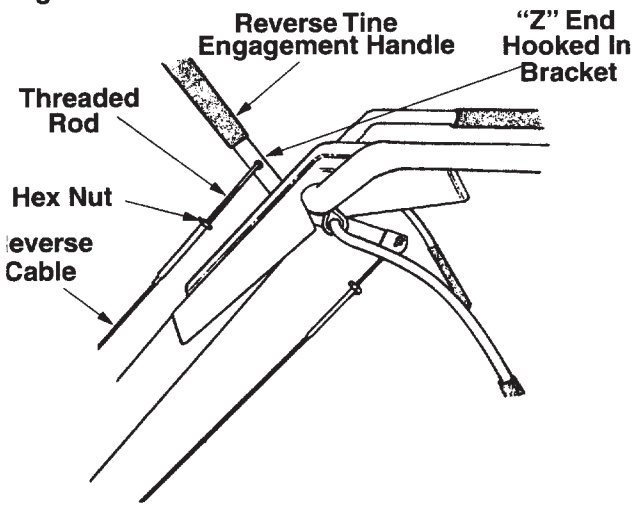

Figure 4. - Model 390

REVERSE CABLE (Model 390 Only)

The reverse clutch cable is the cable which is attached closer to the front of the tiller. Attach the end of the reverse cable to the reverse tine drive clutch lever, above the handle assembly, in the same manner as you attached the forward cable. **(See Figure 4)**

FINAL CLUTCH ADJUSTMENT

To check the clutch cable adjustment, proceed as follows.

1. Disconnect the spark plug wire and move it away from the spark plug to prevent accidental starting.
2. Engage and release the tine engagement handle, then the reverse tine engagement lever (model 390 only). If an excessive noise is heard when releasing either the tine drive clutch handle or lever, the cable may be too loose. Adjust either the forward or reverse clutch cable by loosening the hex nut, threading the rod into the cable one or two turns, then retightening the nut.
3. With tine engagement handle in neutral (released) as shown in figure 5, pull the starter rope several times. **The tines should not turn.** If they turn forward, loosen the hex nut on the forward cable (underneath the handle assembly). If they turn toward the rear (model 390 only), loosen the hex nut on the reverse cable (above the handle assembly). Unthread the rod from the cable 2 or 3 turns. Retighten the hex nut, and check again for correct adjustment.

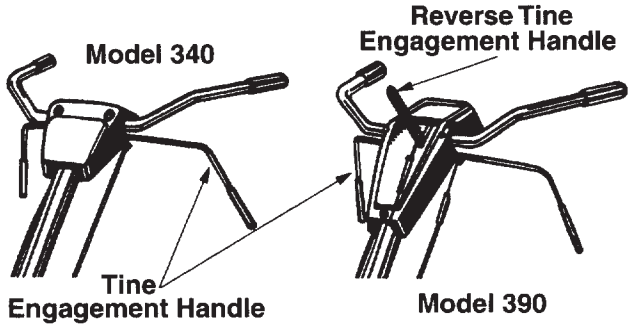

Figure 5.

CONTROLS

THROTTLE CONTROL

The throttle control lever is located on the engine. It controls the engine speed and stops the engine. **(See Figure 6)**

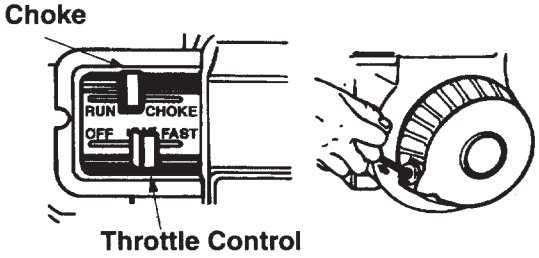

Figure 6.

CHOKE LEVER

The choke lever is located above the throttle control. It is used to enrich the fuel mixture when starting a cold engine.

FORWARD TINE ENGAGEMENT HANDLE

The forward tine engagement handle is located beneath the tiller handle. **(See Figure 5)** Squeezing the handle up against the tiller handle engages the tines. Release the handle to stop the tines.

REVERSE TINE DRIVE CLUTCH LEVER (Model 390 Only)

The reverse tine drive clutch lever is located on top of the handle panel. **(See Figure 5)** Pull the lever to the rear to move the tines in reverse. Release the lever to stop the reverse tine drive.

NOTE: *Never engage both the forward and reverse tine drives at the same time. Engaging both forward and reverse tine drives at the same time could damage the belt drives and cause the engine to stall.*

DEPTH STAKE

The depth stake controls the tilling depth. Refer to "How to Use Your Tiller" section on page 6.

OPERATION

GAS AND OIL FILL-UP

Service the engine with gasoline and oil as instructed in the separate engine manual packed with your tiller. **Read instructions carefully.**

NOTE: *Your tiller is shipped without oil; however, a small amount of oil may be present from the factory.*

TO START ENGINE

WARNING: BE SURE NO ONE IS STANDING IN FRONT OF THE TILLER WHILE THE ENGINE IS RUNNING OR BEING STARTED.

1. Attach spark plug wire to spark plug. Make certain the metal loop on the end of the spark plug wire (inside the boot) is fastened securely over the metal tip on the spark plug.
2. Make certain all controls are in the neutral position (released). **(See Figure 5)**
3. Place the throttle control lever in FAST position. **(See Figure 6)**
4. Move choke lever to CHOKE position. (A warm engine requires little or no choke.)
5. Grasp starter handle **(See Figure 6)** and pull rope out slowly until engine reaches start of compression cycle (rope will pull slightly harder at this point). Let the rope rewind slowly.
6. Pull rope with a rapid, continuous, full arm stroke. Keep a firm grip on starter handle. Let rope rewind slowly. Do not let starter handle snap back against starter.
7. Repeat preceding instructions 5 and 6 until engine starts. When engine starts, move choke lever on engine halfway between CHOKE and RUN.
8. Move throttle control to IDLE position for a few minutes warm-up. Move choke lever to RUN position as engine warms up.

TO STOP ENGINE

1. Move throttle control lever to OFF position.
2. Disconnect spark plug wire from spark plug and ground against the engine to prevent accidental starting while equipment is unattended.

HOW TO USE YOUR TILLER

Your tiller is a precision built machine designed for seed bed preparation, cultivating, furrowing and mulching. It is engineered to minimize the hardest work in the vegetable or flower garden, to till the soil for planting and cultivating, and to perform many other useful labor saving tasks in the garden. With the proper amount of care and maintenance, this machine will provide the owner with many years of service.

WHEEL POSITION

The tiller is shipped with the wheels adjusted such that the unit sits level. While tilling, as the tines enter the ground and the front of the tiller lowers, the wheels must be raised to level the unit, which is essential for proper engine operation. This adjustment is made by removing the clevis pin and hairpin clip from wheel yoke, raising the wheels to the desired height, and replacing the clevis pin and hairpin clip. **(See Figure 7)**

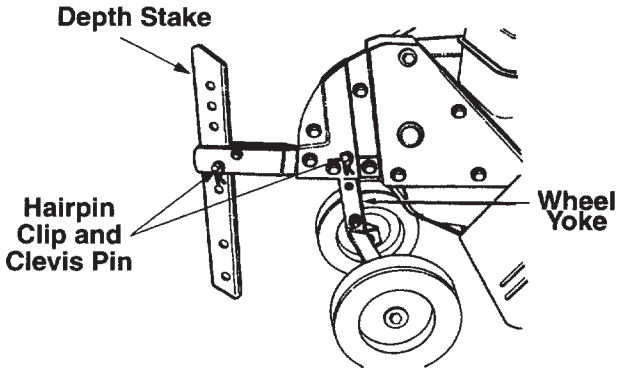

Figure 7.

CONTROLLING SPEED AND TILLING DEPTH

1. **Wheel Yoke Adjustment:** Place wheel yoke so that the wheels are forward (nearest point between wheels and tines) for shallow tilling, cultivating and transport. The forward speed will increase. Turn yoke around (farthest point between wheels and tines) for deep tilling. Forward speed will decrease. **(See Figure 8)**

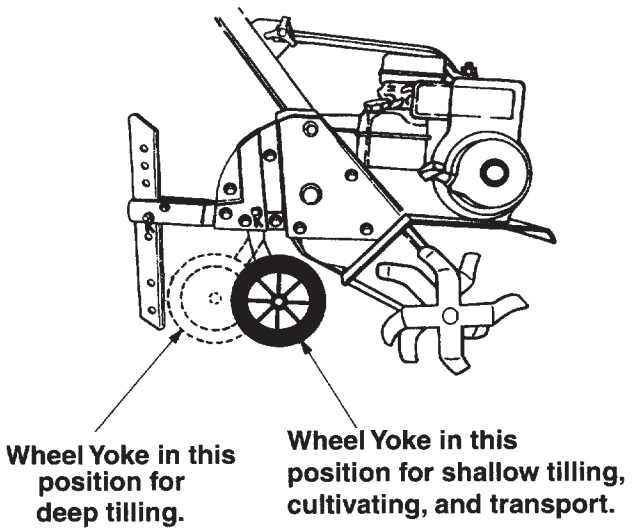

Figure 8.

2. **Depth Stake Adjustment:** The depth stake acts as a brake for the tiller and controls the depth and speed at which the machine will operate. Remove the clevis pin and hairpin clip to raise or lower depth stake. **(See Figure 7)**

By increasing the depth of the depth stake, the forward speed of the machine is reduced, and the working depth is increased. **(See Figure 9)** When the depth stake is raised, the working depth of the machine is reduced and the forward speed is increased. The working depth of the machine may be predetermined by setting the depth stake and wheels so that the wheels are about four inches from the ground when the tines and depth stake are resting on the ground. This setting will permit a working depth of about four inches. When presetting the working depth, the handles should be adjusted so the hand grips are a little above waist height because the tiller will be lower when the tines and depth stake penetrate the ground.

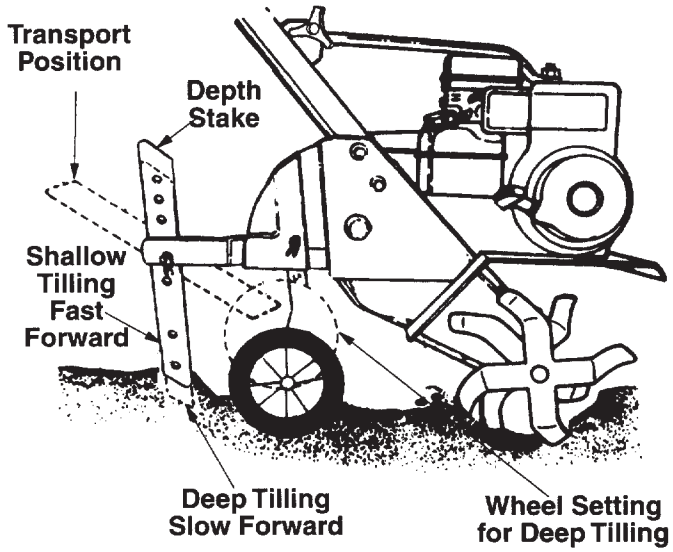

Figure 9.

When tilling, leave approximately 8 inches of untilled soil between the first and second tilling paths, then make the third path between the first and second as shown in figure 10. In some soils, the desired depth is obtained the first time over the garden. In other soils, the desired depth is obtained by going over the garden two or three times. In the latter case, the depth stake should be lowered before each succeeding pass over the garden. Passes should be made across the length and width of the garden alternately. Rocks which are turned up should be removed from the garden area.

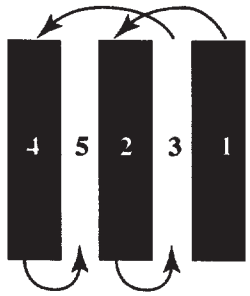

Figure 10.

3. **Handle Pressure:** Further control of tilling depth and travel speed can be obtained by variation of pressure on the handles. A downward pressure on the handles will reduce the working depth and increase the forward speed. An upward pressure on the handles will increase the working depth and reduce the forward speed. The type of soil and working conditions will determine the actual setting of the depth stake and the handle pressure required.
4. **Throttle Control:** The throttle control lever adjusts the engine speed and stops the engine. With the throttle control lever pushed completely forward, the carburetor is in START position. Pulling the throttle control back slightly adjusts the engine speed to FAST. Pulling the throttle back further

reduces the engine speed to SLOW. Pull the throttle completely back to stop the engine.

Use maximum engine speed for deep tilling. Move the throttle control to SLOW when transporting the tiller.

TRANSPORTING THE TILLER

To transport the tiller to or from the garden, pivot the depth stake forward, out of the way. See figure 9. With the throttle control in SLOW position, the unit will walk freely on top of the lawn. If the operator does not allow the tiller to move freely, the unit will start to till the surface.

CULTIVATING

For cultivating, a two to three inch depth is desirable. Setting the wheels and depth stake so that the wheels are about two inches above the ground while the tiller is resting on the tines and depth stake will allow the machine to work at cultivating depth. The throttle should be set to control forward movement to a slow walking speed. With the outer tines installed, the working width of the machine is 22 or 24 inches. For cultivation, this may be reduced to 13 inches by removing the outer tines. Refer to Tine Width Adjustment in Adjustment section. When laying out plant rows, be sure to allow enough width to permit cultivation between the rows. In growing corn or similar crops, check-row planting will permit cross cultivation and practically eliminate hand hoeing. **(See Figure 11)**

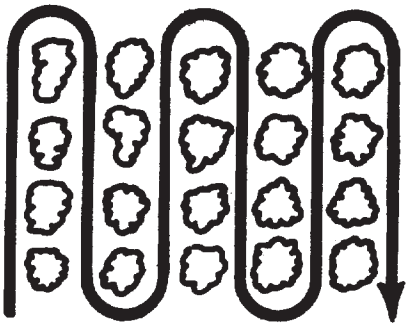

Figure 11.

The tiller has many uses other than tilling and cultivating a garden. One of these is the preparation of lawn area for seeding. The tiller will prepare a deep seed bed which will be free of hard untilled spots, allowing a better stand of grass to grow. The tiller is very useful for loosening hard soil for excavation with a shovel. No tedious hand pickwork will be necessary. Your tiller may be used for mixing compost in the pile, or for mixing it with the soil in your garden. This should be done after the soil has been broken to the full working depth. The compost should be worked in to a depth of six to seven inches. This may be done by working the length of the garden, and then by making separate passes across its width. The addition of decayed organic matter will substantially increase the fertility of your garden. For proper decaying action, fertilizer should be applied and worked in with the mulch materials. Breaking up leaves and straw and mixing it with several inches of soil causes the soil to hold moisture longer and allows proper aeration of the plant root system. This also retards the growth of weeds.

The U.S. Department of Agriculture and various state and local agencies offer published booklets and expert advice on all phases of gardening. They should be consulted regarding soil information, planting dates, and the most satisfactory varieties of crop for your particular area.

ADJUSTMENTS

WARNING: Disconnect the spark plug wire and ground against the engine before performing any adjustments, repairs, or maintenance.

WHEEL ADJUSTMENTS

To adjust the wheel yoke and wheel position, refer to "How To Use Your Tiller," on page 6.

DEPTH STAKE ADJUSTMENT

To adjust the depth stake, refer to "How To Use Your Tiller" on page 6.

TINE WIDTH ADJUSTMENT

The tilling width of the unit is 22 inches. **(See figure 12)** Tilling width can be increased to 24 inches by removing the clevis pins and hairpin clips, sliding the outer tines out one inch, and securing in this position with the clevis pins and hairpin clips. **(See Figure 13)** For cultivation, reduce the tine width to 13 inches by removing the outer tines completely. **(See Figure 14)**

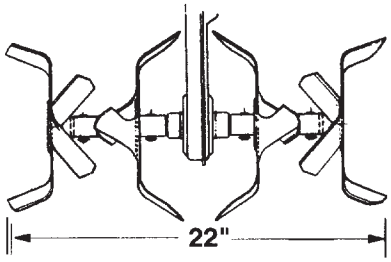

Figure 12.

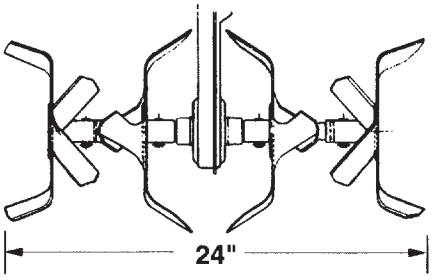

Figure 13.

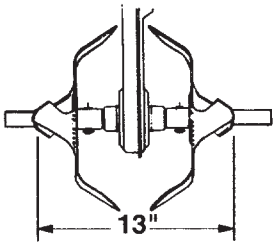

Figure 14.

CLUTCH CONTROL ADJUSTMENTS

To adjust the clutch controls, refer to the Final Adjustment section of assembly instructions.

CARBURETOR ADJUSTMENT

WARNING: If any adjustments are made to the engine while the engine is running (e.g. carburetor), disengage all clutches and tines. Keep clear of all moving parts. Be careful of heated surfaces and muffler.

Minor carburetor adjustment may be required to compensate for differences in fuel, temperature, altitude or load. If adjustments are needed, refer to the engine manual packed with the tiller.

NOTE: *A dirty air cleaner will cause engine to run rough. Be certain air cleaner is clean and attached to the carburetor before adjusting carburetor. Do not make unnecessary adjustments. Factory settings are satisfactory for most applications and conditions.*

LUBRICATION

WARNING: Always stop engine and disconnect spark plug wire before cleaning, lubricating or doing any kind of work on tiller.

Pivot Points-Remove the belt cover and lubricate all moving parts and pivot points at least once a season using SAE 30 engine oil.

Chain Drive-The chain case is pre-lubricated and sealed at the factory.

MAINTENANCE

WARNING: Disconnect spark plug wire and ground it against the engine before performing any repairs or maintenance.

TROUBLE SHOOTING

Refer to page 12 of this manual for trouble shooting information.

ENGINE

Refer to the separate engine manual for all engine maintenance instructions.

Maintain **engine oil** as instructed in the separate engine manual packed with your unit. Read and follow instructions carefully.

Service **air cleaner** every 25 hours under normal conditions. Clean every few hours under extremely dusty conditions. Poor engine performance and flooding usually indicates that the air cleaner should be serviced. To service the air cleaner, refer to the separate engine manual packed with your unit.

IMPORTANT: Never run your engine without air cleaner completely assembled.

The **spark plug** should be cleaned and the gap reset once a season. Spark plug replacement is recommended at the start of each tilling season; check engine manual for correct plug type and gap specifications.

Clean the engine regularly with a cloth or brush.

Keep the cooling system (blower housing area) clean to permit proper air circulation which is essential to engine performance and life. Be certain to remove all dirt and combustible debris from muffler area.

CLEANING THE TINE AREA

Clean the underside of the tine shield after each use. The dirt washes off the tines easier if washed off immediately instead of after it dries.

BELT REMOVAL AND REPLACEMENT

Your tiller has been engineered with belts made of special material (Kevlar Tensile). They should not be replaced with an off-the-shelf belt. If belt replacement is required, order belt or belts by part number from your nearest authorized service dealer.

Forward Drive Belt- Part No. 754-0428
Reverse Drive Belt- Part No. 754-0429
(Model 390 Only)

Reverse Drive Belt (Model 390 Only)

1. Disconnect and ground the spark plug wire against the engine. Remove the belt cover from the left side of the tiller as follows.
2. Remove two self-tapping screws and flat washers from the front of belt cover. **(See Figure 15)**
3. Remove the hex stop nut and flat washer from the side of the belt cover. Remove belt cover.

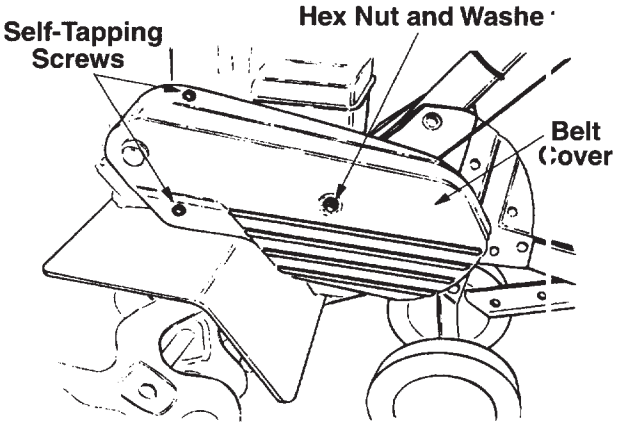

Figure 15.

4. Lift the belt off the transmission pulley.
5. Remove the hex nut which secures the reverse idler pulley to the idler bracket. Slide idler pulley out and remove the belt. **(See Figure 16)**

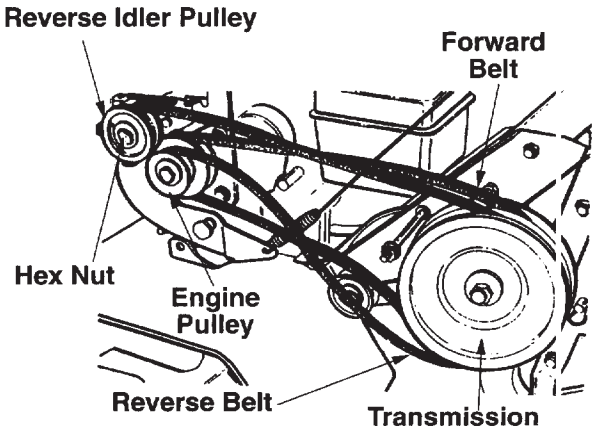

Figure 16. Model 390 Shown

6. Reassemble the new belt, following instructions in reverse order. Make certain the reverse drive belt is assembled with the wide side of the belt against the transmission and engine pulleys. Be certain to adjust the clutch control as instructed in the final clutch adjustment section of assembly instructions

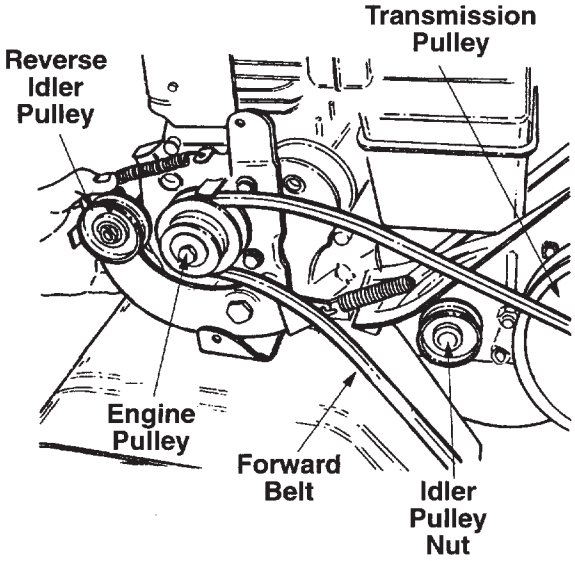

Figure 17. Model 390 Shown

Forward Drive Belt (See Figure 16)

1. **Model 340:** Remove the belt cover by following steps 1 and 2 of the previous section.
   Model 390: Remove the reverse drive belt as instructed in the previous section.
2. Remove the belt keeper from the idler pulley by removing the idler pulley nut.
3. Lift belt off the idler pulley and transmission pulley. See figure 17.
4. Using a 9/16" wrench, remove bolt from engine pulley. See figure 17.
5. Push reverse idler pulley bracket forward, and remove engine pulley and belt. See figure 17.
6. Reassemble the new belt, following instructions in reverse order. Make certain the forward drive belt is assembled with the wide side of the belt away from the transmission and engine pulleys. Be certain to adjust the clutch control as instructed in the final clutch adjustment section of assembly instructions.

OFF-SEASON STORAGE

If the tiller is to be inoperative for a period longer than 30 days, the following precautions are recommended.

1. Working outdoors, drain all fuel from the fuel tank. Run the engine until it stops from lack of fuel.

WARNING: DO NOT DRAIN FUEL WHILE SMOKING, OR IF NEAR AN OPEN FIRE.

2. Drain all the oil from the crankcase (this should be done after the engine has been operated and is still warm) and refill the crankcase with fresh oil.
3. Protect the inside of the engine for storage as instructed in the separate engine manual packed with your tiller.
4. Clean the engine and the entire tiller thoroughly.
5. Wipe tines with oiled rag to prevent rust.

NOTE: *When storing any type of power equipment in an unventilated or metal storage shed, care should be taken to rustproof the equipment. Using a light oil or silicone, coat the equipment, especially any springs, bearings and cables.*

6. Store in a clean, dry area. Do not store next to corrosive materials, such as fertilizer.

TROUBLE SHOOTING GUIDE

Trouble	Possible Cause(s)	Corrective Action
Engine fails to start	1. Fuel tank empty, or stale fuel. 2. Throttle control lever not in correct starting position. 3. Blocked fuel line. 4. Spark plug wire disconnected. 5. Faulty spark plug. 6. Engine flooded.	1. Fill tank with clean, fresh gasoline. 2. Move throttle lever to start position. 3. Clean fuel line. 4. Connect wire to spark plug. 5. Clean, adjust gap or replace. 6. Crank engine with throttle in FAST position.
Engine runs erratic	1. Unit running on CHOKE. 2. Spark plug wire loose. 3. Blocked fuel line or stale fuel. 4. Vent in gas cap plugged. 5. Water or dirt in fuel system. 6. Dirty air cleaner. 7. Carburetor out of adjustment.	1. Move choke lever to OFF position. 2. Connect and tighten spark plug wire. 3. Clean fuel line; fill tank with clean, fresh gasoline. 4. Clear vent. 5. Drain fuel tank. Refill with fresh fuel. 6. Clean air cleaner as instructed in separate engine manual. 7. Adjust carburetor as instructed in separate engine manual.
Engine overheats	1. Engine oil level low. 2. Air flow restricted. 3. Carburetor not adjusted properly.	1. Fill crankcase with proper oil. 2. Remove blower housing and clean as instructed in separate engine manual. 3. Adjust carburetor as instructed in separate engine manual.
Tines do not engage	1. Foreign object lodged in tines. 2. Tine clevis pin(s) missing. 3. Control cable not adjusted properly. 4. Belt worn and/or stretched.	1. Dislodge foreign object. 2. Replace tine clevis pin(s). 3. Adjust control cable (see assembly instructions). 4. Replace belt.

NOTE: For repairs beyond the minor adjustments listed above, please contact your local service dealer.

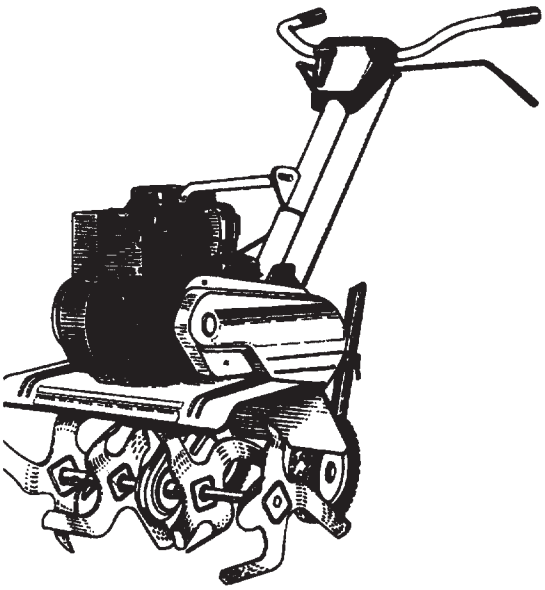

Model 340 Shown

TILLER

ASSORTED PARTS LIST

Engine Oil (SAE 30)
Part No. 737-0208

Forward Drive Clutch Cable
For Model 340: Part No. 746-0918
Reverse Drive Clutch Cable
For Model 340: N/A
For Model 390: Part No. 746-0919

Forward Drive Belt
For Model 340 and 390
Part No. 754-0428
Reverse Drive Belt
For Model 340: N/A
For Model 390: Part No. 754-0429

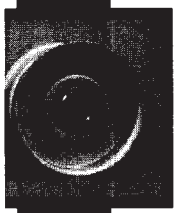

Forward Idler Pulley For
Model 340: Part No. 756-0313
For Model 390: Part No. 756-0313
Reverse Idler Pulley For
Model 340: N/A
For Model 390: Part No. 756-0199

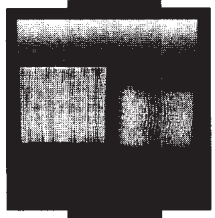

Air Filter
For Model 340 and 390
Part No. 491588

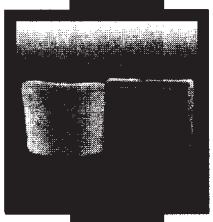

Air Pre-Cleaner
For Model 340 and 390
Part No. 491435

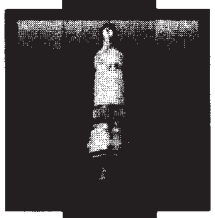

Spark Plug
Part No. RJ19LM

Illustrated Parts Manual
Part No. 770-97-6A

For Parts, Accessories or Service Information,

Call 1-800-800-7310

Copy the information from your model plate here:

Model Number

Serial Number

Product Number

May not fill all the above spaces

The only way to ensure the performance of your product is to use original equipment parts and accessories. MTD designs and engineers quality parts to exacting specifications. When you substitute, you take a chance on quality, reliability, safety and performance. Use MTD original equipment,
the best buy on the American Landscape.
-American Made American Owned -

WARNING: The Engine Exhaust from this product contains chemicals known to the State of California to cause cancer, birth defects or other reproductive harm.